INSTALLER/CONSUMER RETAIN THIS APPLIANCE MANUAL WITH THE INSTALLED APPLIANCE

INSTALLATION AND OPERATING INSTRUCTIONS

GOLDEN BLOUNT

MODEL LFP9624 POWER VENTED TOP VENT GAS FIREPLACE

PFS APPROVED FOR NATURAL GAS OR PROPANE GAS

IMPORTANT! Read all instructions carefully before starting installation. Failure to follow these instructions may result in property damage, personal injury or possible loss of life.

WARNING: If the information in these instructions is not followed exactly, a fire or explosion may result causing property damage, personal injury or death.

– Do not store or use gasoline or other flammable vapors and liquids in the vicinity of this or any other appliance.

– **WHAT TO DO IF YOU SMELL GAS:**

- Do not try to light any appliance.
- Do not touch any electrical switch; do not use any phone in your building;
- Immediately call your gas supplier from a neighbor's phone. Follow the gas supplier's instructions.
- If you cannot reach your gas supplier, call the fire department.

– Installation and service must be performed by a qualified installer, service agency or the gas supplier.

MANUFACTURED BY:

Golden Blount

4301 WESTGROVE DRIVE
ADDISON TX. 75001

- The Flue Damper must be in the full open position when operating this appliance.
- This fireplace is to be burned only with the material supplied with the fireplace. Burning other items could cause a fire hazard or injury.
- For best results, Natural Gas pressure should be 7" to 12" W.C. and 11" W.C. for Propane Gas.
- Check the label on the firebox to assure the proper gas type. Never use anything but the correct gas type for your fireplace.

This appliance complies with National Safety and is tested and listed to ANSI Z21.50 - 2014 as Vented Gas fireplaces. Installation must conform to local codes. In the absence of local codes, installation must conform with the current National Fuel Gas Code, ANSI Z223.1.

WARNING: THIS FIREPLACE MUST BE INSTALLED USING AN APPROVED POWER VENT FAN. SEE "INSTALLING CHIMNEY/VENT SYSTEMS" SECTION OF THIS MANUAL FOR APPROVED FAN MODELS AND SPECIFICATIONS.

TABLE OF CONTENTS

Section

Layout Options 2

Identificationof Parts 3

Building Codes and Safety Standards 4

Piping and Gas Pressure Requirements 5

Installation Instructions 6-9

Glass Installation / Flame Stabilizer Installation.....10-11

Operating Guidelines 12

Maintenance Instructions/Wiring Diagram..... 12-13

Lighting Instructions.....14-15

Trouble Shooting 16-17

Replacement Parts..... 18

INSTALLATION OPTIONS

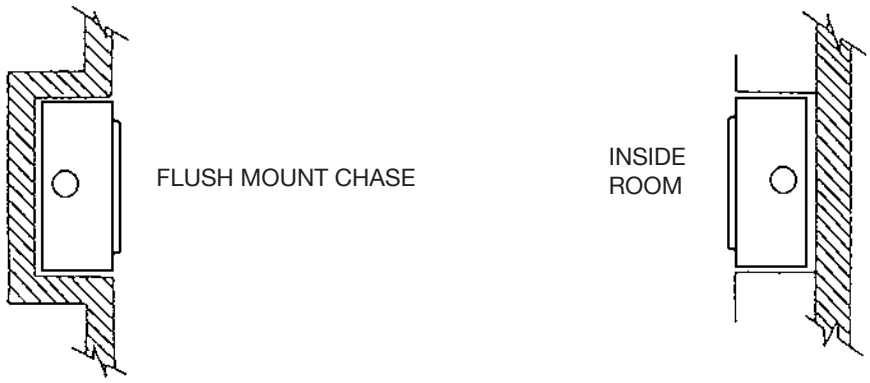

Figure 2.1

LFP9624 COMPONENT LOCATIONS

OUTSIDE AIR CONNECTIONS

INTERIOR VIEW

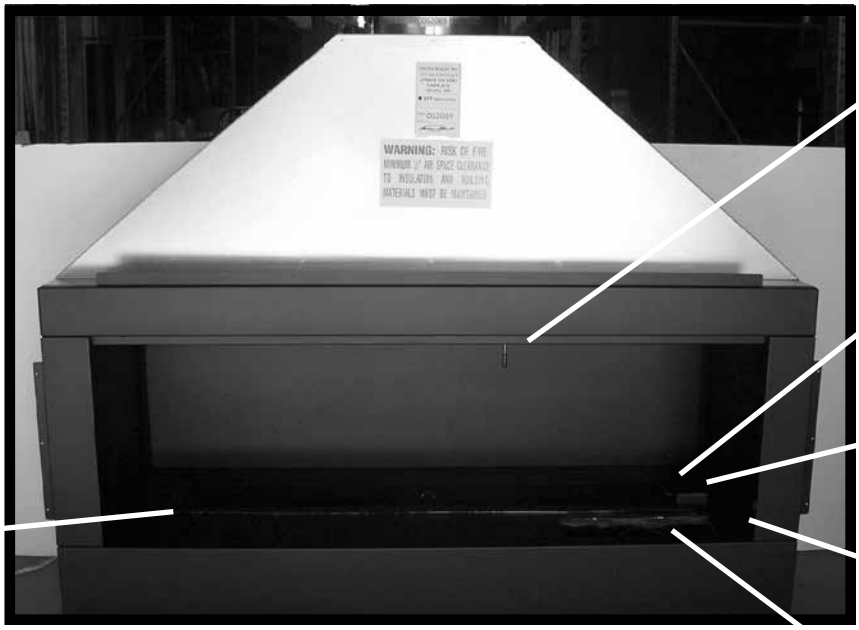

BUILDING CODES AND SAFETY STANDARDS

The design of this FIREPLACE has been tested and is listed with PFS CORPORATION in accordance with THE AMERICAN NATIONAL STANDARDS INSTITUTE — ANSI Z21.50-2014.

This manual serves only as a basic guideline for installation and use of this firebox and gas piping. The complete installation must be in accordance with local codes and ordinances, or, in the absence of local codes, with the American National Standards Institute National Fuel Gas Code Z223.1 latest edition.

GENERAL INFORMATION

MODEL LFP9624 IS A TOP VENTED GAS FIREPLACE. IT IS DESIGNED TO BURN BY DRAWING COMBUSTION AIR FROM THE OUTSIDE AIR KIT THAT ATTACHES TO THE SIDE (SIDES) OF THE FIREPLACE.

THE EXHAUST FLUE GASES ARE TO BE VENTED THROUGH THE TOP-VENT USING 10" B-TYPE GAS VENT PIPE, ASSISTED BY AN APPROVED POWER VENT EXHAUST FAN.

THE CONTROL SYSTEM IS A (3V) SPARK TO PILOT TYPE THAT INCLUDES A ON-OFF SHUTOFF VALVE, A GAS CONTROL VALVE, A SPARK TO PILOT LIGHT ASSEMBLY, AND ON-OFF ROCKER SWITCH.

WARNING: THIS UNIT IS NOT FOR USE WITH SOLID FUEL.

NOTE: INSTALLATION AND REPAIR SHOULD BE DONE BY A QUALIFIED SERVICE PERSON. THE APPLIANCE SHOULD BE INSPECTED BEFORE USE AND AT LEAST ANNUALLY BY A PROFESSIONAL SERVICE PERSON. MORE FREQUENT CLEANING MAY BE REQUIRED DUE TO EXCESSIVE LINT FROM CARPETING, BEDDING MATERIAL, ETC. IT IS IMPERATIVE THAT THE UNITS CONTROL COMPARTMENT, BURNERS, AND CIRCULATING AIR PASSAGE-WAYS BE KEPT CLEAN TO PROVIDE ADEQUATE COMBUSTION AND VENTILATION AIR.

CLEARANCES REQUIRED

MINIMUM CLEARANCES FOR THE FIREBOX ARE:

1/2" ON THE SIDES AND BACK AND 0 AT THE BOTTOM. TOP CLEARANCE IS 3".

NOTE: PROVIDE ADEQUATE CLEARANCES AROUND AIR OPENINGS INTO THE COMBUSTION CHAMBER.

NOTE: FLUSH-TO-THE-FLOOR OR RECESSED FIREPLACE INSTALLATIONS REQUIRE ENSURING STRICT NON-COMBUSTIBLE CLEARANCES, AND ADHERING TO LOCAL BUILDING CODES.

NOTE: ADEQUATE ACCESSIBILITY CLEARANCES FOR SERVICING AND PROPER OPERATION MUST BE PROVIDED IN ACCORDANCE WITH ANSI Z21.50-2014.

GAS PIPING AND GAS PRESSURE REQUIREMENTS

All gas piping must be installed to comply with local codes, or, in the absence of local codes, with the latest edition of the National Fuel Gas Code ANSI Z223.1.

Unions in gas lines shall be of ground joint type. Compounds used on threaded joints of gas piping must be resistant to the action of liquefied petroleum gas. Gas piping must be of sufficient size to provide a minimum natural gas pressure at the appliance of 7" water column or 11" for L.P. gases for the purpose of input adjustment. The maximum inlet gas pressure to the unit must not exceed 10" for natural gas, and 13" for L.P. gases. If this unit is to be supplied with L.P. gas (bottled propane) the tank or bottle supplying the gas must have a regulator that reduces the gas pressure to between 11 and 13 inches water column. The control will not operate with gas line pressure directly from the tank and may leak gas due to this excessive pressure.

DANGER: OPERATION OF THIS UNIT ON L.P. GAS WITHOUT AN APPROVED REGULATOR AT THE SUPPLY CONTAINER WILL LEAD TO GAS LEAKS AT THE CONTROL WITH POSSIBLE FIRE OR EXPLOSION.

Include a manual shut-off valve and union in the line so the control or heater may be disconnected for servicing. Include a drip leg and a plugged 1/8" N.P.T. tapping into the line also. The tapping must be accessible for the test gauge connection immediately upstream of the gas supply connection to the unit. Use a soap and water solution or liquid gas leak detector to coat each joint in the piping system and look for bubbles which indicate gas leaks. Repair all gas leaks.

CAUTION: THE APPLIANCE AND ITS APPLIANCE MAIN GAS VALVE MUST BE DISCONNECTED FROM THE GAS SUPPLY PIPING SYSTEM DURING ANY PRESSURE TESTING OF THAT SYSTEM AT TEST PRESSURES IN EXCESS OF 1/2 PSI (3.5 KPA).

THE APPLIANCE MUST BE ISOLATED FROM THE GAS SUPPLY PIPING SYSTEM BY CLOSING THE EQUIPMENT SHUTOFF VALVE DURING ANY PRESSURE TESTING OF THE GAS SUPPLY PIPING SYSTEM AT TEST PRESSURES EQUAL TO OR LESS THAN 1/2 PSI (3.5 KPA).

DANGER: DO NOT USE CANDLES, MATCHES OR OTHER IGNITION SOURCES WHEN CHECKING FOR LEAKS. FUEL GASES ARE VERY FLAMMABLE AND IN CERTAIN CONCENTRATIONS, EXPLOSIVE. CHECKING FOR LEAKS WITH AN OPEN FLAME MAY LEAD TO FIRE OR EXPLOSION.

INSTALLATION INSTRUCTIONS

In planning the installation for the fireplace it is necessary to determine where the unit is to be installed, the routing of the B-type vent system, and whether optional accessories are to be used gas supply piping should also be planned.

Model LFP9624 (with the use of the Outside Air Kit) can be installed in a bedroom (in the United States) which has a total volume of unconfined space appropriate to the particular installation. Refer to the National Fuel Gas Code ANSI Z223.1/NFPA 54 - (current edition), the Uniform Mechanical Code - (current edition), and Local Building Officials for the options allowed in obtaining an effective bedroom volume of unconfined space.

The fireplace can be mounted on any of the following surfaces:
1. A flat combustible surface.
2. A raised wooden platform.
3. Four (4) corner supports.

(Example: four (4) concrete masonry blocks.) These supports must be positioned so they contact all four corner edges on the bottom of the unit.

If the fireplace is installed directly on carpeting, tile, or other combustible material other than wood flooring, the appliance shall be installed on a metal or wood panel extending the full width and depth of the unit.

Fireplace framing can be built before or after the fireplace is set in place. Framing should be positioned to accommodate wall covering and fireplace facing material. The fireplace framing should be constructed of 2 x 4 lumber or heavier. The framing headers may rest on the fireplacestandoffs. Refer to Figure 7.1 for fireplace and framing reference dimensions.

CAUTION: VERIFY FIREPLACE DIMENSIONS, FRAMING METHODS AND WALL COVERING DETAILS BEFORE FRAMING CONSTRUCTION BEGINS.

Determine the exact position of the fireplace so that the vent run can be planned. Figure 2.1 shows possible locations for the fireplace; inside of a room, flush mount in a chase. Using a level, make sure the fireplace is properly positioned and squared.

WARNING: DUE TO HIGH TEMPERATURES, THE APPLIANCE SHOULD BE LOCATED OUT OF TRAFFIC AND AWAY FROM FURNITURE AND DRAPERIES. CLOTHING OR OTHER FLAMMABLE MATERIAL SHOULD NOT BE PLACED ON OR NEAR THE APPLIANCE.

MINIMUM FRAMING DIMENSIONS LFP9624

MINIMUM FRAMING DIMENSIONS PRIOR TO POSITIONING UNIT

111"W X 58"H X 24" D

FINISHED FRAMING DIMENSIONS WITH UNIT IN POSITION

106"W X 38"H X 24"D

NOTE: DIMENSIONS PRIOR TO POSITIONING FIREPLACE ALLOWS CLEARANCE FOR OUTSIDE AIR COLLARS AS WELL AS FIREPLACE HEADER TO BE NAILED AT CORRECT HEIGHT AFTER BOX HAS BEEN SET.

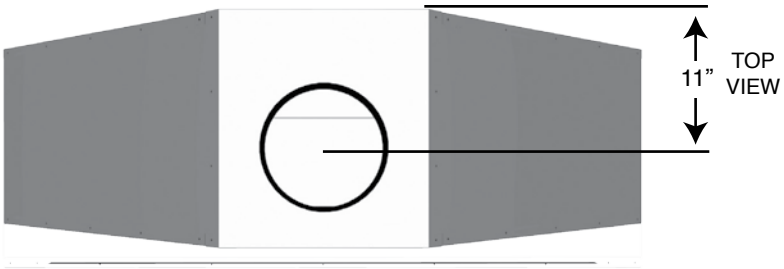

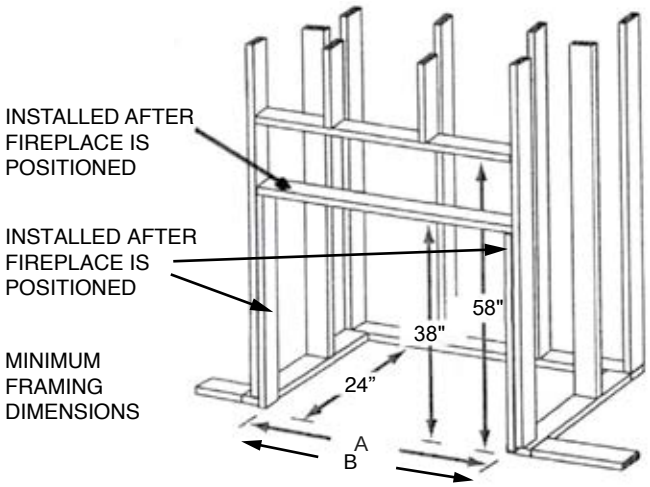

Figure 7.1

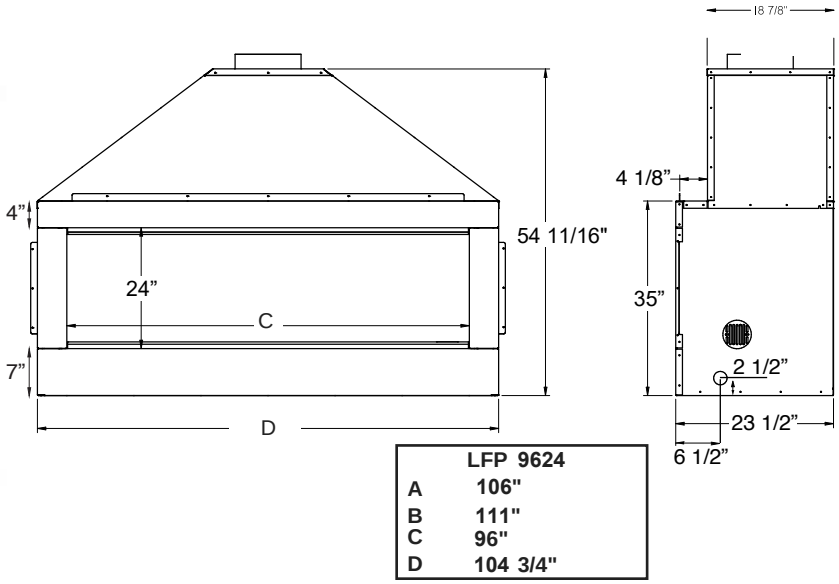

	LFP 9624
A	106"
B	111"
C	96"
D	104 3/4"

Installing Chimney/Vent System

Model LFP9624 is approved to be used with 10" B-Type Gas Vent. The Fireplace must be installed with an Enervex Model RS 14 Exhaust Fan, PDS-1 or ADC-100 Draft Switch that is connected to this Fireplace.

WARNING: This Fireplace must not be installed without Exhaust Fan, Golden Blount, Inc. can supply the Enervex products or they can be purchased through a third party supplier.

WARNING: A Proven Draft Switch must be installed with the Exhaust Fan and connected to this Fireplace. A Proven Draft Switch will prevent this fireplace from operating if the Exhaust Fan is not providing proper evacuation of flue gases.

Note: Detailed instructions for Enervex Exhaust Fan, Power Draft Switch installation is included in the Enervex Products.

LFP9624 APPROVED VENT CONFIGURATIONS

The Following Requirements Must Be Met:

- Minimum Vent Length ---------5'
- Maximum Vertical Run --------50'
- Maximum Horizontal Run -----50'
- Maximum 45 Deg. Elbows ----4 ea.
- Maximum 90 Deg. Elbow ------3 ea.

IF YOUR DESIRED INSTALLATION DOES NOT MEET THE ABOVE REQUIREMENTS, CONTACT GOLDEN BLOUNT, INC. TO VERIFY IF DESIRED INSTALLATION CAN BE CONGIFURED WITH OTHER APPROVED POWER VENT EXHAUST FAN. 1-800-833-1139

WARNING: This gas appliance must not be connected to a chimney flue serving a separate solid-fuel burning appliance.

Note: a draft hood is installed and is in the same atmospheric pressure zone as the combustion air inlet to the appliance and is located so that the relief opening is accessible for checking vent operation.

Installing Outside Air Kit

Model LFP9624 is supplied with the component parts for outside combustion with the exception of the 4" flex duct. It is recommended that the outside air system be used whenever possible. Connect 4" Class-1 Flex duct or Metal Vent to duct collars on side of firebox, run duct to fresh air source and terminate using duct termination caps. The Outside air can be opened by pulling control knob toward front of fireplace and closed by pushing towards rear (Refer to figure 9.1).

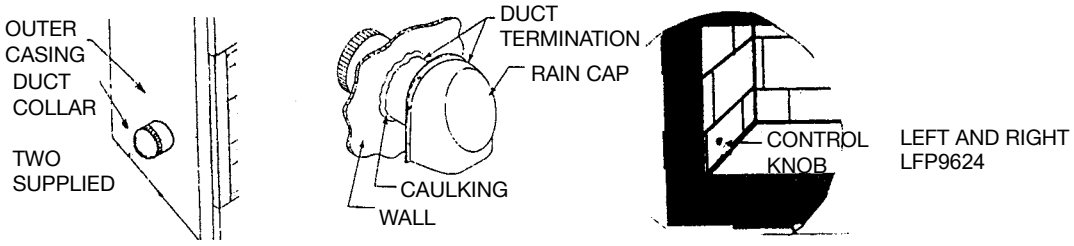

Figure 9.1

Connecting the Gas Line

Consult local building codes before gas line installation. This gas fireplace is designed to accept a 1/2" supply line. Have the gas line installed by a qualified service person in accordance with all building codes. Install gas line to fireplace on the right side attaching gas line to the gas flex line inside the control box accessed by opening the control box door.

Finishing the Wall

Finish the wall with the material of your choice. Do not install a combustible mantle or other combustible projection above the fireplace opening unless it is a minimum of 12 inches above top of fireplace opening. (Figure 9.2)

*Non-combustible material used between top of opening and mantle must not exceed 3" in depth.

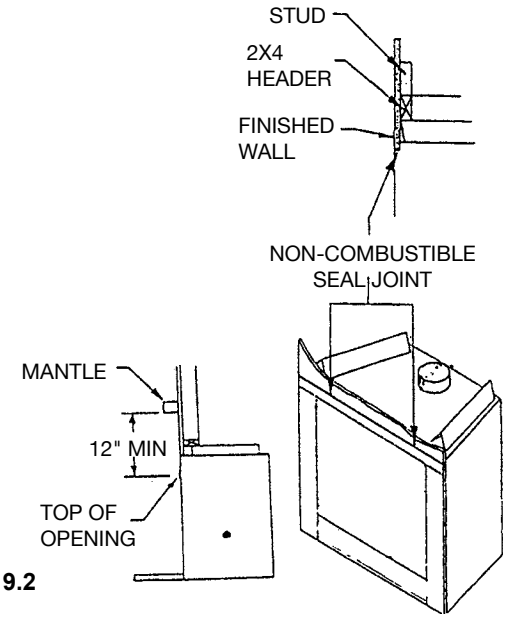

Figure 9.2

CAUTION: All joints between the finished wall and the fireplace surround (Top and Sides) can only be sealed with non-combustible material. Only non-combustible material can be applied as facing to the fireplace surround. (Figure 9.2)

Hearth Extension

A Hearth Extension may be installed. But it is not required for vented gas fireplaces.

GLASS INSTALLATION (optional)

1. MODEL LFP9624 can be used with approved Fireglass to enhance the overall appearance.
2. Fill the burner tray below and up to the top of the burner ports. Do not cover burner ports.
3. Distribute additional glass around front, sides and rear of burner tray, covering floor area. (Figures 10.1-10.2)

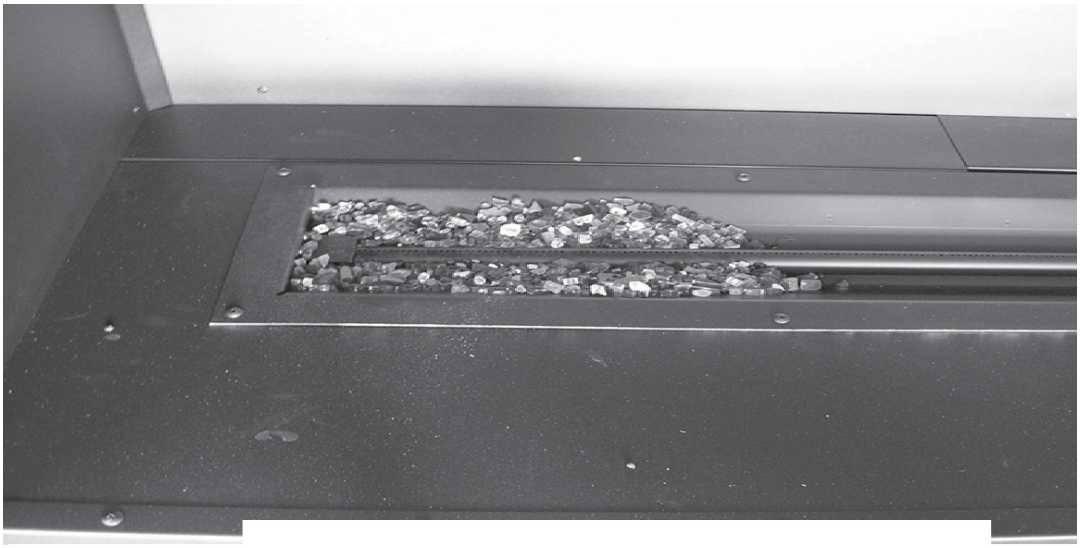

Figure 10.1

GLASS INSTALLATION CONT.

Figure 10.2

GLASS FLAME STABILIZER INSTALLATION

ALL LFP MODELS ARE SUPPLIED WITH A GLASS FLAME STABILIZER THAT HELPS BURNER FLAME MAINTAIN A VERTICAL POSITION.

LOCATE GLASS FLAME STABILIZER CLIPS AND INSERT GLASS FLAME STABILIZER INTO THEM. CENTER GLASS FLAME STABILIZER SO THAT THERE IS SAME CLEARANCE ON LEFT AND RIGHT SIDES.

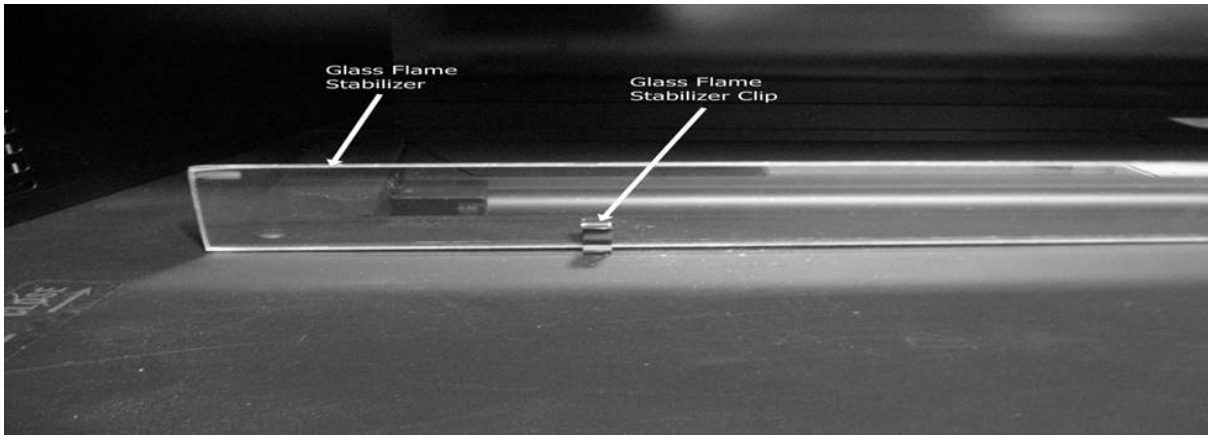

3. GLASS FLAME STABILIZER SHOULD BE SEATED AGAINST FIREPLACE FLOOR AS SHOWN

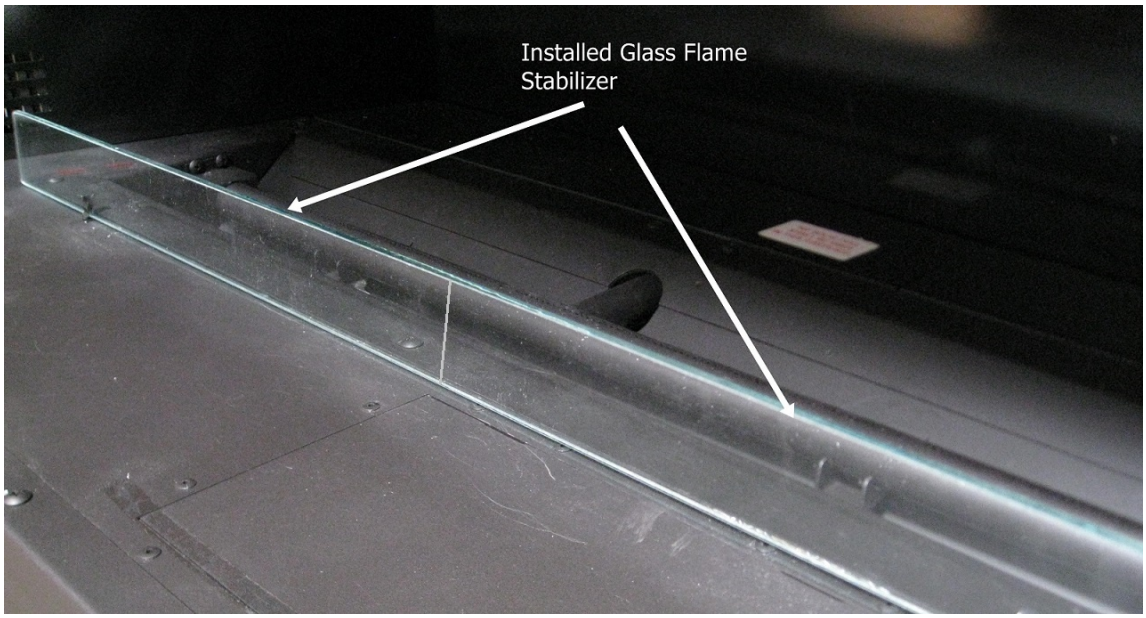

OPERATING GUIDELINES

Upon completing the gas line connection, a small amount of air will be in the lines. When first lighting the pilot light, it will take a few minutes for the lines to purge themselves of this air. Once the purging is complete, the pilot and burner will light and operate as indicated in the instruction manual. Subsequent lighting of the appliance will not require such purging.

WARNING: CHILDREN AND ADULTS SHOULD BE ALERTED TO THE HAZARDS OF HIGH SURFACE TEMPERATURE AND SHOULD STAY AWAY TO AVOID BURNS OR CLOTHING IGNITION. YOUNG CHILDREN SHOULD BE CAREFULLY SUPERVISED WHEN THEY ARE IN THE SAME ROOM AS THE APPLIANCE.

IMPORTANT: TURN OFF GAS BEFORE SERVICING APPLIANCE. IT IS RECOMMENDED THAT A COMPETENT SERVICE TECHNICIAN PERFORM THESE CHECKUPS AT THE BEGINNING OF EACH HEATING SEASON.

WARNING: THE FLOW OF COMBUSTION AND VENTILATION AIR MUST NOT BE OBSTRUCTED.

When lit for the first time, the appliance will emit a slight odor for an hour or two. This is due to paint and lubricants used in the manufacturing process. The main burner flame characteristics are steady, not lifting or floating. Typically, the top 1/4 inch of the flame sensor should be engulfed in the pilot flame. A periodic check of these characteristics is necessary (Figure 12.1).

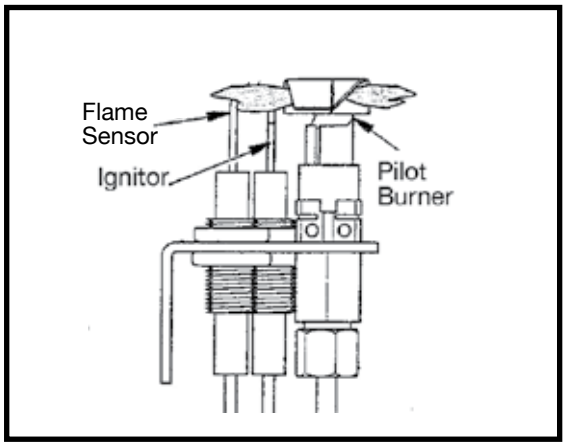

Figure 12.1

MAINTENANCE INSTRUCTIONS

IMPORTANT: THE APPLIANCE AREA MUST BE KEPT CLEAR AND FREE FROM COMBUSTIBLE MATERIALS, GASOLINE AND OTHER FLAMMABLE VAPORS AND LIQUIDS.

Visually inspect pilot periodically. Brush or blow away any dust or linen accumulations. If pilot orifice is plugged, disassembly may be required to remove any foreign material from orifice or tubing.

Venting system should be periodically examined by a qualified service technician or agency to ensure proper air flow.

WIRING DIAGRAM

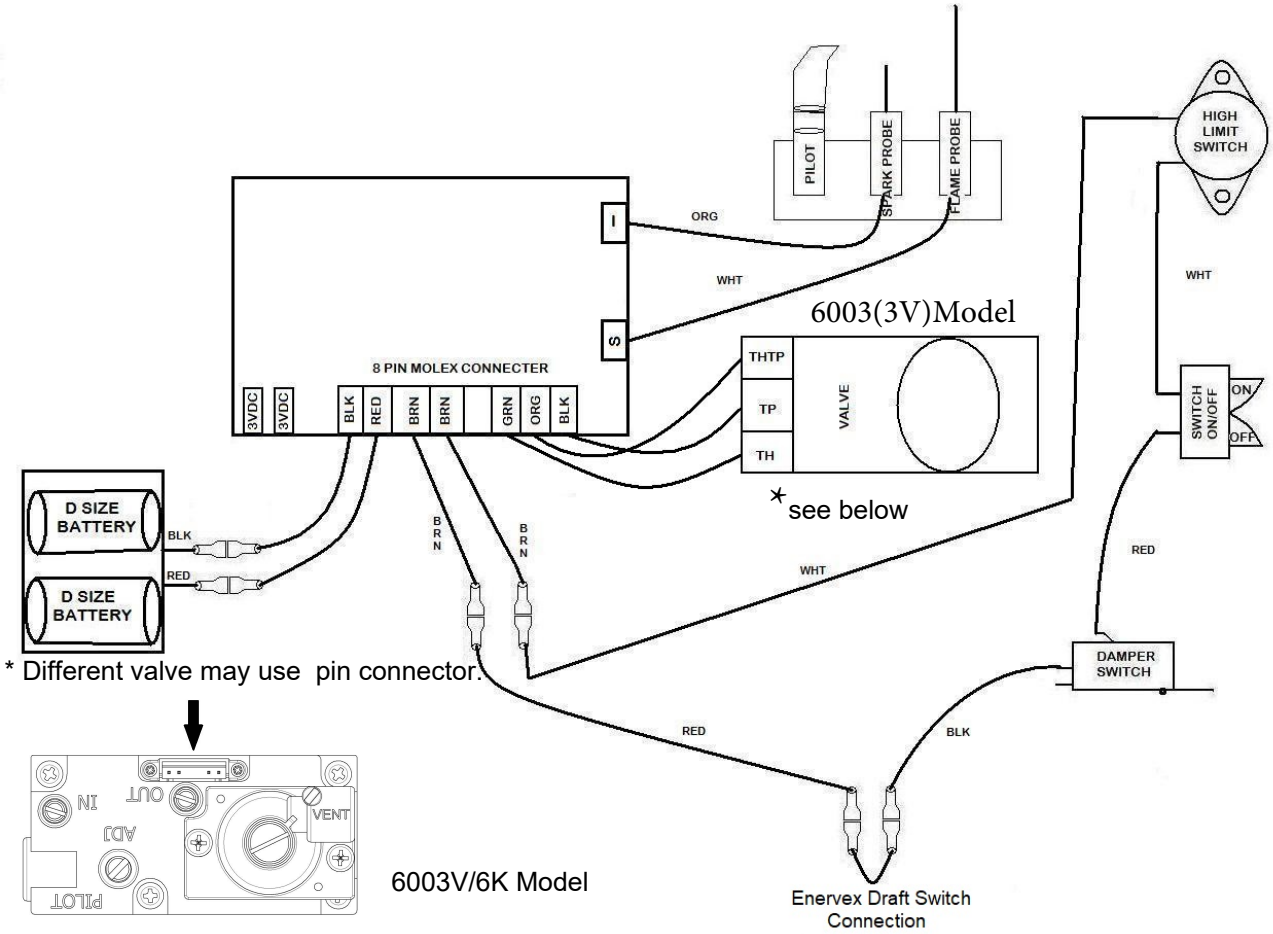

* Different valve may use pin connector.

FOR YOUR SAFETY READ BEFORE LIGHTING

WARNING: IF YOU DO NOT FOLLOW THESE INSTRUCTIONS EXACTLY, A FIRE OR EXPLOSION MAY RESULT CAUSING PROPERTY DAMAGE, PERSONAL INJURY OR LOSS OF LIFE.

A. This appliance is equipped with an ignition device which automatically lights the pilot. Do not light pilot by hand.

B. BEFORE LIGHTING smell all around the appliance area for gas. Be sure to smell next to the floor because some gas is heavier than air and will settle on the floor.

WHAT TO DO IF YOU SMELL GAS:

- Do not try to light any appliance
- Do not touch any electric switch:
- Do not use any phone in your building.
- Immediately call your gas supplier from a neighbor's phone. Follow the gas supplier's instructions

C. Do not use this appliance if any part has been under water. Immediately call a qualified service technician to inspect the appliance and to replace any part of the gas control system which has been under water.

D. An approved Power Vent Fan must be installed prior to operating this Fireplace. See page 8 of this manual for fan information.

LIGHTING INSTRUCTIONS ELEC. SPARK TO PILOT

1. "STOP" Read the safety information above.
2. After installing Enervex RS-14 Power Vent and Proven Draft Switch you can proceed with lighting of this Fireplace
3. Set the switch to "OFF".
4. Remove batteries from battery pack.
5. This appliance is equipped with an ignition device which automatically lights the burner. Do not try to light the burner by hand.
6. Wait (5) minutes to clear out any gas. Then smell for gas, including near the floor. If you smell gas, STOP! Follow "B" in the safety information above. If you don't smell gas, go to next step.
7. Install (2) D batteries in battery pack.
8. Turn ON/OFF rocker switch to " ON".
9. If the appliance will not operate, follow the instructions "To turn Off Gas To Appliance" and call your service technician or gas supplier.

NOTE: DAMPER CONTROL LEVER MUST BE IN THE "OPEN" POSITION TO IGNITE.

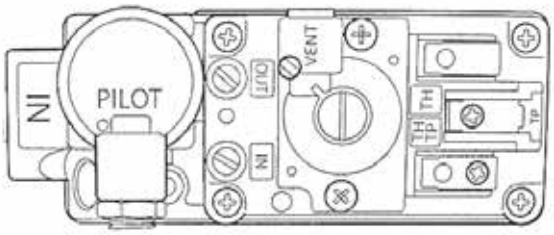

GAS VALVE

NOTE: THIS FIREPLACE CAN ALSO BE SERVICED WITH 120V JUNCTION BOX AND 3-VOLT TRANSFORMER WHICH CAN BE USED TO PROVIDE POWER IF DESIRED (PART# JB-3V).

TO TURN OFF GAS TO APPLIANCE

1. Turn ON/OFF rocker switch to “OFF”
2. Remove batteries from appliance if service is to be performed.

LPG (PROPANE) WARNING

THE FOLLOWING WARNING APPLIES TO INSTALLATIONS USING L.P. (PROPANE GAS):

WARNING: To avoid possible injury, fire and explosion, please read and follow these precautions and all instructions of this appliance before operating. This appliance uses L.P. (Propane) gas which is heavier than air and will remain at the floor level is there is a leak. Before lighting, smell at floor level and/or use other means (such as using a soap solution on all piping and connections, using a gas detector, etc.) to check for gas leaks. NOTE: L.P. (Propane) gas can become odorless and CANNOT always be detected by smell. If you smell gas, detect a gas leak or suspect that a gas leak exists, follow these rules:

1. Get all people out of building.
2. DO NOT light matches. DO NOT turn electric lights or switches on or off in area. DO NOT use an electric fan to remove gas from area. DO NOT use a telephone inside of building.
3. Shut off gas at L.P. tank outside of building.
4. Telephone gas company and fire department. Ask instructions. Before hanging up, give your name, address and phone number. DO NOT go back into building.

   If your L.P. tank runs out of fuel, turn off gas at the appliance. After L.P. tank is refilled, appliance must be re-lit according to manufacturer’s instructions. If The gas control has been exposed to WATER in any way, DO NOT try to use it. It must be replaced. DO NOT attempt repair on gas control or appliance.

   Tampering is DANGEROUS and voids all warranties. Any component that is found to be faulty, must be replaced with an approved component.

   IMPORTANT: Always keep the appliance area clear and free from combustible materials, gasoline and other flammable vapors and liquids.

   Never obstruct the flow of combustion and ventilation air. Keep the front of the appliance clear of all obstacles and materials.

   To obtain proper operation, it is imperative that the pilot and main burner flame characteristics are steady, not lifting or floating. Typically the top 1/4 Inch of the flame sensor should be engulfed in the pilot flame. (Figure 12.1)

TROUBLE SHOOTING

With proper installation and maintenance, your new Gas Fireplace should provide years of trouble-free service. If you do experience a problem, refer to the trouble shooting guide shown below. This guide will assist a qualified service person in the diagnosis of problems and the corrective action to be taken.

SYMPTOM	POSSIBLE CAUSE	CORRECTIVE ACTION
Ignitor will not spark or pilot will not light	1. No gas supply or shutoff valve is OFF	1. Check to see if you have gas supply and that equipment shutoff valve is opened
	2. Air in gas line	2. Repeat lighting procedure several times to purge all air out of lines. If after repeated attempts appliance does not light, call for qualified service and repair
	3. Construction debris clogging pilot orifice	3. Remove debris and dirt, inspect and clean any other possible obstructions
	4. Low gas pressure	4. Contact your gas supplier to check pressure
	5. Kinked pilot line	5. Have a qualified technician replace pilot line
	6. Control valve is not opening	6. Replace control valve
	7. No power to unit or ignition module	7. Check that main power is on and that all wire connections are made correctly to ignition model (see *Wiring Diagram*, page 13). Check battery voltage and replace batteries if needed. If battery voltage is good and module does not operate, have module replaced.
	8. Damper Closed	8. Open Damper
	9. Enervex Fan not operating and connecting Draft Switch to operate Fireplace.	9. Check to see if Enervex Fan is running and Draft Switch is closing Fireplace circuit.

SYMPTOM	POSSIBLE CAUSE	CORRECTIVE ACTION
Pilot will not stay lit	1. Loose wiring on ignitor wire to ignition module and/or poor ground to ignition module	1. Check wiring connection. Refer to wiring diagram (see *Wiring Diagram*, page 11)
	2. Pilot flame too low to sense	2. Clean and adjust pilot burner and check gas supply and inlet pressure to unit *Note: Have a qualified technician replace pilot assembly if broken or corroded*
	3. Flame sensor defective	3. Replace flame sensor
Frequent pilot outage	1. Pilot flame may be too low, causing safety pilot to "drop out"	1. Clean and adjust pilot flame for maximum flame impingement on flame probe
	2. Improper venting or excessive blockage	2. Have vent system inspected, including termination cap. Remove any restriction or obstruction
Slight smoke or order during initial operation	1. Residues from manufacturing process	1. Problem will stop after a few hours of operation
Pilot and Main Burner go out while in operation	1. High Limit Switch is defective of has reached its maximum temperature	1. Allow unit to cool. Then repeat lighting instructions.
		2. If above does not allow for ignition, check high limit switch. Place jumper lines across high limit switch. If you can re-ignite the pilot your high limit switch is defective. Replace high limit switch before using
	3. No L.P. in tank	3. Check L.P. tank. You may be out of fuel

REPLACEMENT PARTS

THE FOLLOWING REPLACEMENT PARTS ARE AVAILABLE FROM YOUR GOLDEN BLOUNT DEALER

ITEM	PART #	DESCRIPTION
1	STP-TV-127	Gas Valve - N/G
2	STP-TV-128	Gas Valve - LP
3	LFP-103	1/4" Pilot Gas Line
4	LFP-104-9624	1/2" Burner Gas Line (9624)
6	TV-106	On/Off Switch
7	STP-LFP-107	Pilot Assembly - NAT
8	STP-LFP-108	Pilot Assembly - LP
10	TV-130	1/2" Shut Off Valve
11	LFP-111-9624	Burner Orifice NAT (9624)
12	LFP-112-9624	Burner Orifice LP (9624)
13	TV-124	Temp Limit Switch
14	TV-125	Damper Switch
15	STP-TV-129	Ignition Module
16	STP-TV-126	Battery Pack

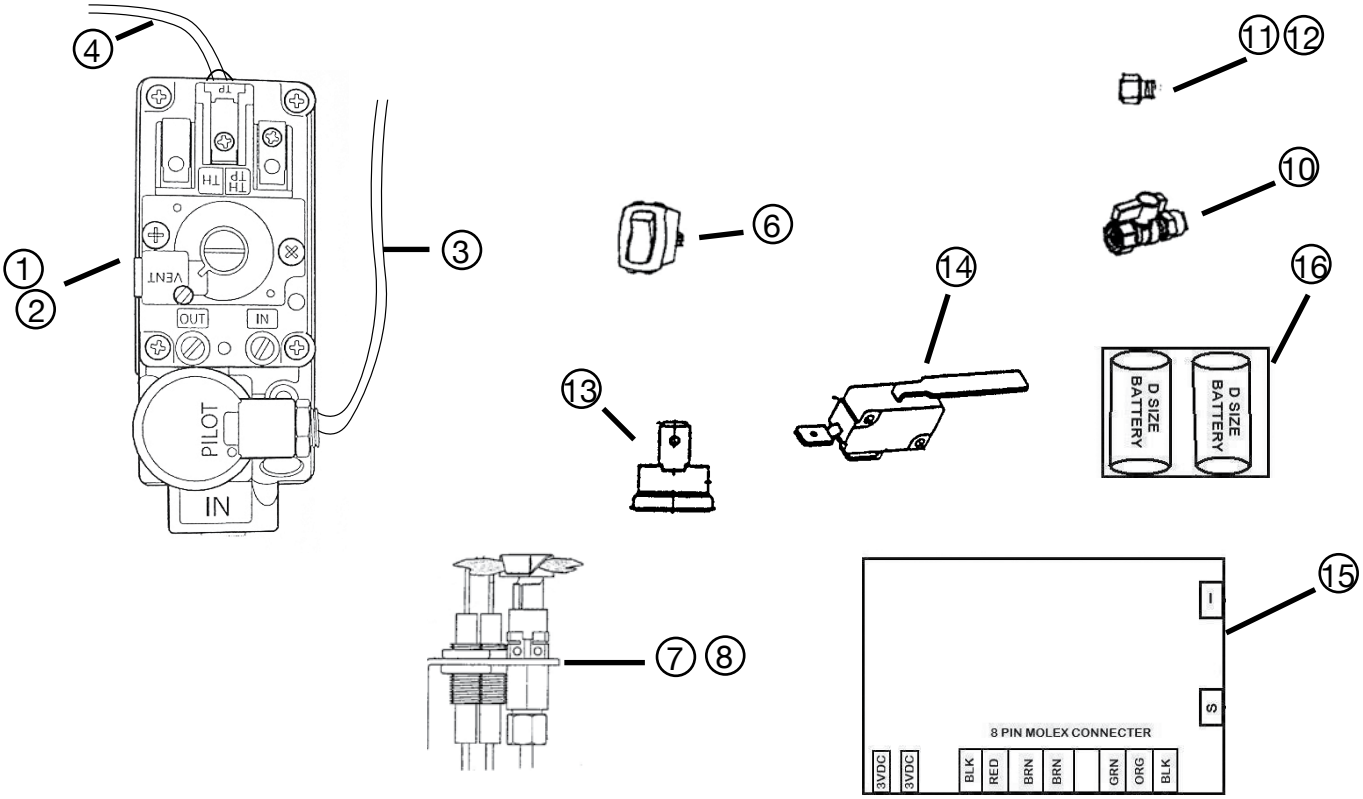

TWO YEAR LIMITED WARRANTY

THIS WARRANTY IS LIMITED TO TOP-VENT GAS FIREPLACES MANUFACTURED AND ASSEMBLED BY GOLDEN BLOUNT.

IF GOLDEN BLOUNT FINDS THAT ANY PART OR PORTION OF THE FIREPLACE COVERED BY THIS WARRANTY IS DEFECTIVE IN MATERIAL OR WORKMANSHIP UNDER NORMAL USE AND SERVICE AS DESCRIBED IN THE INSTALLATION AND OPERATING INSTRUCTIONS, GOLDEN BLOUNT WILL TAKE THE FOLLOWING ACTIONS:

1. WITHIN THE FIRST YEAR FROM THE DATE OF INSTALLATION, GOLDEN BLOUNT SHALL, AT ITS OPTION REPLACE OR REPAIR ANY SUCH DEFECT IN MATERIAL OR WORKMANSHIP, AT GOLDEN BLOUNT'S EXPENSE, INCLUDING A REASONABLE LABOR ALLOWANCE AS DETERMINED BY GOLDEN BLOUNT. GOLDEN BLOUNT SHALL NOT BE RESPONSIBLE FOR ANY OTHER LABOR COSTS, OR EXPENSES, INCLUDING INDIRECT, INCIDENTAL OR CONSEQUENTIAL DAMAGES.
2. DURING THE SECOND YEAR AFTER THE DATE OF INSTALLATION, GOLDEN BLOUNT SHALL SUPPLY REPLACEMENT PARTS AT THE CURRENT WHOLESALE PRICE, BUT GOLDEN BLOUNT SHALL NOT BE RESPONSIBLE FOR ANY LABOR, TRANSPORTATION, OR THE INDIRECT, INCIDENTAL, OR CONSEQUENTIAL DAMAGES.
3. ALL FACTORY OPTIONAL COMPONENTS OR ACCESSORIES FOUND TO BE DEFECTIVE WILL BE REPAIRED OR REPLACED WITHOUT CHARGE DURING THE FIRST YEAR AFTER INSTALLATION.

GOLDEN BLOUNT MAY DISCHARGE ITS ENTIRE WARRANTY LIABILITY BY REFUNDING THE PRICE OF THE PRODUCT.

PRODUCTS MADE BY OTHER MANUFACTURERS, SOLD WITH THE FIREPLACE OR THEREAFTER ARE NOT COVERED BY THIS LIMITED WARRANTY. THE USE OF OTHER UNAUTHORIZED COMPONENTS WILL MAKE THIS WARRANTY NULL AND VOID.

THIS LIMITED WARRANTY WILL BE VOID IF THE APPLIANCE IS NOT INSTALLED BY A QUALIFIED INSTALLER AND ACCORDING TO THE INSTALLATION INSTRUCTIONS. THE LIMITED WARRANTY ALSO IS VOID IF THE FIREPLACE IS NOT OPERATED, AT ALL TIMES, ACCORDING TO THE OPERATING INSTRUCTIONS FURNISHED.

SOME STATES DO NOT ALLOW EXCLUSION OF INCIDENTAL OR CONSEQUENTIAL DAMAGES OR LIMITS ON THE DURATION OF IMPLIED WARRANTIES SO THESE LIMITATIONS MAY NOT APPLY TO YOU.

GOLDEN BLOUNT RESERVES THE RIGHT TO INVESTIGATE ANY AND ALL CLAIMS AGAINST THIS WARRANTY AND TO DECIDE ON THE METHOD OF SETTLEMENT.

GOLDEN BLOUNT IS NOT RESPONSIBLE FOR WARRANTY WORK COMPLETED WITHOUT OBTAINING GOLDEN BLOUNT'S CONSENT. GOLDEN BLOUNT EMPLOYEES AND DEALERS HAVE NO RIGHT TO ALTER THIS WRITTEN WARRANTY.

WARRANTY INFORMATION

PLEASE BE ABLE TO PROVIDE THE FOLLOWING INFORMATION WHEN COMMUNICATING WITH GOLDEN BLOUNT OR ITS DEALERS OR DISTRIBUTORS REGARDING SERVICE UNDER THIS WARRANTY.

MODEL NO.
SERIAL NO.
DATE OF PURCHASE

Golden Blount, Inc.
4301 Westgrove Dr.
Addison, TX. 75001
(972) 250-3113